GENERAL NOTES – VESTIBULE ADDITION [redacted]

1 GENERAL

1.1 ALL CONSTRUCTION SHALL CONFORM TO THE CURRENT ADOPTED BUILDING CODE, APPLICABLE MUNICIPAL BY-LAWS, AND ALL MANUFACTURER INSTALLATION REQUIREMENTS.

1.2 CONTRACTOR SHALL VERIFY ALL DIMENSIONS, GRADES, EXISTING CONDITIONS, AND SITE CONDITIONS PRIOR TO CONSTRUCTION.

1.3 DO NOT SCALE DRAWINGS. USE FIGURED DIMENSIONS ONLY.

1.4 ANY DISCREPANCIES BETWEEN DRAWINGS, SITE CONDITIONS, OR MANUFACTURER REQUIREMENTS SHALL BE REPORTED TO THE DESIGNER PRIOR TO PROCEEDING.

1.5 ALL WORK SHALL BE COMPLETED IN A GOOD AND WORKMANLIKE MANNER.

1.6 ALL MATERIALS SHALL BE NEW, SOUND, AND SUITABLE FOR THEIR INTENDED USE UNLESS NOTED OTHERWISE.

1.7 NOTES VIA SEPARATE DRAWINGS ARE DETAILED SHALL TAKE PRECEDENCE OVER GENERAL NOTES WHERE NOTED.

1.8 DRAWINGS ARE PREPARED FOR BUILDING PERMIT REVIEW AND ARE NOT TO BE USED FOR CONSTRUCTION UNLESS STAMPED, SIGNED, AND DATED BY THE DESIGNER OF RECORD.

2 PROJECT SCOPE

2.1 WORK INCLUDES CONSTRUCTION OF A COMPRESSED FRONT VESTIBULE ADDITION WITHIN THE EXISTING ENTRANCE POINT AREA.

2.2 WORK INCLUDES REMOVAL OF EXISTING ENTRANCE POINT, STEP AS REQUIRED TO COMPLETE THE PROPOSED WORK.

2.3 WORK INCLUDES NEW CONCRETE HEATED FLOOR SLAB(S), NEW EXTERIOR WALL FRAMING, NEW ENTRANCE DOOR, AND RELATED FINISHES AS SHOWN ON DRAWINGS.

2.4 WORK INCLUDES REMOVAL & TRANSITIONS TO/MATCH WITH, NEW MASONRY OPENINGS, AND RELATED INTERIOR / EXTERIOR FINISH REPAIRS AS SHOWN ON DRAWINGS.

2.5 WORK INCLUDES LIMITED CEILING, SOFFIT MODIFICATIONS WITHIN THE EXISTING ENTRANCE POINT AREA AS SHOWN ON DRAWINGS.

2.6 EXISTING PANELLING, GARAGE ASSEMBLY, ROOF AREAS, DECK, AND SITE FEATURES ARE SHOWN FOR CONTEXT ONLY UNLESS SPECIFICALLY NOTED AS PART OF THE WORK.

2.7 CONTRACTOR SHALL PROTECT EXISTING DWELLING, GARAGE, FINISHES, SERVICES, LANDSCAPING, DRIVEWAY, AND ADJACENT PROPERTY DURING CONSTRUCTION.

3 EXISTING CONDITIONS

3.1 EXISTING CONSTRUCTION SHOWN IS BASED ON CLIENT PROVIDED INFORMATION, AVAILABLE RECORDS, PHOTOGRAPHS, AND SITE MEASUREMENTS.

3.2 VERIFY ALL EXISTING CONSTRUCTION AND SITE CONDITIONS ON SITE PRIOR TO CONSTRUCTION.

3.3 VERIFY EXISTING WALL FRAMING, SILL PLATES, FOUNDATION WALLS, ROOF FRAMING, JOISTS, SERVICES, AND FINISHES PRIOR TO CONSTRUCTION.

3.4 VERIFY EXISTING FOUNDATION WALL HEIGHT, SILL PLATE LOCATION, AND BEAM BEARING CONDITIONS PRIOR TO INSTALLATION OF NEW FLOOR FRAMING.

3.5 VERIFY EXISTING WATER SERVICE LOCATION PRIOR TO EXCAVATION.

3.6 VERIFY ALL UNDERGROUND SERVICES PRIOR TO EXCAVATION OR GRADE WORK.

3.7 DO NOT INSTALL FOOTINGS, PIERS, OR SUPPORTS OVER EXISTING SERVICES.

3.8 CONTRACTOR SHALL MAKE GOOD ALL EXISTING INTERIOR AND EXTERIOR FINISHES DISTURBED BY THE WORK.

3.9 EXISTING ASSEMBLIES SHOWN ARE TO BE VERIFIED ON SITE AND ADJUSTED AS REQUIRED TO SUIT ACTUAL FIELD CONDITIONS.

4 DEMOLITION AND PROTECTION

4.1 REMOVE ONLY EXISTING CONSTRUCTION REQUIRED TO COMPLETE THE PROPOSED WORK.

4.2 REMOVE EXISTING ENTRANCE POINT, STEP AS REQUIRED TO SUIT NEW VESTIBULE CONSTRUCTION.

4.3 REMOVE EXISTING WINDOW UNITS WHERE NOTED.

4.4 EXISTING LINTELS TO REMAIN WHERE NOTED.

4.5 PROTECT EXISTING LINTELS, SILL FRAMING, ROOF FRAMING, FOUNDATION WALLS, SERVICES, AND FINISHES TO REMAIN.

4.6 TEMPORARY SUPPORT SHALL BE PROVIDED WHERE REQUIRED DURING REMOVAL OR MODIFICATION OF EXISTING CONSTRUCTION.

4.7 DISPOSE OF DEMOLITION MATERIALS IN ACCORDANCE WITH APPLICABLE MUNICIPAL REQUIREMENTS.

4.8 MAKE GOOD ALL DISTURBED AREAS AFTER COMPLETION.

5 LUMBER AND FRAMING

5.1 ALL STRUCTURAL LUMBER SHALL BE SPF No.1 OR BETTER UNLESS NOTED OTHERWISE.

5.2 EXTERIOR WOOD EXPOSED TO WEATHER OR LOCATED NEAR GRADE SHALL BE PRESSURE TREATED OR OTHERWISE SUITABLE FOR EXTERIOR USE.

5.3 PROVIDE 21# MIN. STUDS @ 16" O.C. UNLESS NOTED OTHERWISE.

5.4 PROVIDE 21# FLOOR JOISTS @ 16" O.C. UNLESS NOTED OTHERWISE.

5.5 PROVIDE 3PLY 21# 11 7/8" LVL'S FOR FLOOR BEAM AS SHOWN.

5.6 PROVIDE 3PLY 21# LINTELS WHERE NOTED.

5.7 PROVIDE CONTINUOUS 3PLY 21# JOISTS AT NEW VESTIBULE FRONT WALL AS SHOWN.

5.8 PROVIDE JACK STUDS, KING STUDS, BUILT-UP SUPPORTS, BLOCKING, AND BACKING AS SHOWN OR AS REQUIRED.

5.9 EXISTING LINTELS TO REMAIN WHERE NOTED.

5.10 VERIFY EXISTING JOISTS, CONDITIONS ON SITE PRIOR TO INFILL OR WINDOW ALTERATION WORK.

5.11 PROVIDE SOLID LUMBER BACKING AT DOOR AND TIGHT TO EXISTING WALL WHERE NOTED.

5.12 PROVIDE SOLID BLOCKING AND BACKING FOR DOORS, WINDOWS, TRIM, FINISHES, SHIMMING, AND ACCESSORIES AS REQUIRED.

6 FOUNDATIONS, PIERS, AND BEAM SUPPORTS

6.1 PROVIDE 12" Ø CONC FOOTTUBE PIER FOR BEAM POST WITH PIER FOOTING AS SHOWN.

6.2 FOOTTUBE PIER SHALL EXTEND MIN 4'-0" BELOW FINISHED GRADE TO UNDISTURBED SOIL.

6.3 BOTTOM OF PIER FOOTING SHALL BE INSTALLED AS PER MANUFACTURER SPECS.

6.4 PROVIDE 3PLY 21# 11 7/8" I-JOIST BEAM ON APPROVED GALVANIZED BEAM SADDLE / SEAT.

6.5 BEAM SADDLE / SEAT SHALL SUIT 4 1/2" WIDE BUILT UP BEAM.

6.6 ANCHOR EMBEDMENT SHALL BE MIN 4" INTO 12" Ø CONC FOOTTUBE OR AS PER MANUFACTURER SPECS.

6.7 PROVIDE MIN 1" STANDOFF BETWEEN WOOD BEAM AND CONCRETE.

6.8 BEAM SADDLE / SEAT ANCHORS AND FASTENERS SHALL BE INSTALLED AS PER MANUFACTURER SPECS.

6.9 DO NOT BEAM BUILT UP BEAM ON BRICK VENEER.

6.10 BUILT UP BEAM SHALL BEAR ON STRUCTURAL WALL FOUNDATION ALL LINE OR APPROVED STRUCTURAL SUPPORT ONLY.

6.11 PROVIDE MIN 3" BEARING AT EXISTING WALL - ALL LINE WHERE NOTED.

6.12 PROVIDE BUILT UP SUPPORT AS REQUIRED AT EXISTING WALL BEARING LOCATIONS.

6.13 SEAL AND FLUSH BEAM POCKETS AT EXISTING WALL CONDITIONS.

6.14 MAKE GOOD EXISTING BRICK VENEER, SIDING, SHEATHING, AND EXTERIOR FINISHES DISTURBED BY BEAM POCKET WORK.

7 FLOOR FRAMING AND SUPPORTED FLOOR ASSEMBLY

7.1 NEW VESTIBULE FLOOR SHALL BE CONSTRUCTED AS A HEATED SUPPORTED FLOOR ASSEMBLY.

7.2 PROVIDE 21# FLOOR JOISTS @ 16" O.C. AS SHOWN.

7.3 PROVIDE SIMPSON STRONG-TIE U-LOCK JOIST HANGERS OR APPROVED EQUAL AT ALL 21# FLOOR JOISTS.

7.4 INSTALL JOIST HANGERS AND FASTENERS AS PER MANUFACTURER SPECS.

7.5 PROVIDE 3/4" T&G PLYWOOD FLOOR SHEATHING UNLESS NOTED OTHERWISE.

7.6 PROVIDE VAPOUR BARRIER TO SHIMS SIDE OF INSULATION.

7.7 PROVIDE R12 BATT INSULATION BETWEEN 21# FLOOR JOISTS.

7.8 PROVIDE MIN R20 CONTINUOUS RIGID INSULATION BELOW FLOOR JOISTS.

7.9 PROVIDE 6# EXTERIOR GRADE PLYWOOD SIDE TO UNDERSIDE OF FLOOR ASSEMBLY.

7.10 UNDERSIDE PLYWOOD SIDE TO BE 42" AS AIR BARRIER.

7.11 SEAL ALL UNDERSIDE PLYWOOD TAPE JOINTS, EDGES, PENETRATIONS, AND PERIMETER CONNECTIONS.

7.12 PROVIDE EXTERIOR SHIPTAIL GRADE EXPOSED FLOOR PERIMETER AS SHOWN.

7.13 PROVIDE FLASHING BETWEEN METAL SILL AND SHIPTAIL.

7.14 SHIPTAIL MATERIAL COLOUR AND FINISH AS PER OWNER.

8 EXTERIOR WALLS, AIR BARRIER, AND VAPOUR BARRIER

8.1 NEW EXTERIOR WALLS SHALL BE CONSTRUCTED OF BRICK AS SHOWN.

8.2 PROVIDE 21# WALL STUDS @ 16" O.C. UNLESS NOTED OTHERWISE.

8.3 PROVIDE R24 BATT INSULATION WITHIN NEW 21# WALL CAVITIES.

8.4 PROVIDE MIN R10 CONTINUOUS RIGID INSULATION AT NEW EXTERIOR WALLS AS SHOWN.

8.5 PROVIDE AIR BARRIER CONTINUITY AT NEW WALL, FLOOR, ROOF, AND EXISTING WALL INTERFACES.

8.6 PROVIDE VAPOUR BARRIER TO WARM SIDE OF INSULATION.

8.7 NEW 3-0 WALL LAYING 21 WITH EXISTING 3-0 WHERE ACCESSIBLE.

8.8 SEAL 3-0 LAYS WITH COMPATIBLE TAPE / SEALANT.

8.9 SEAL ALL JOINTS, GOUGE, PENETRATIONS, AND PERIMETER CONNECTIONS IN AIR BARRIER SYSTEM.

8.10 NEW EXTERIOR SIDING, STRAPPING, TRIM, FLASHING, AND FINISHES SHALL MATCH EXISTING WHERE POSSIBLE.

8.11 TRIAL SIDING / TRIM BUILD OUT SHALL BE COORDINATED ON SITE.

9 ROOF, CEILING, AND SOFFIT WORK

9.1 EXISTING ENTRANCE ROOF CONSTRUCTION TO REMAIN WHERE POSSIBLE.

9.2 VERIFY EXISTING ROOF RAFTERS, CEILING JOISTS, FASCIA, SOFFIT, LEDGER BOARDS, AND ROOF SUPPORT CONDITIONS ON SITE.

9.3 REMOVE EXISTING HEATED SOFFIT WHERE NOTED AND REPLACE WITH NEW CONSTRUCTION.

9.4 PROVIDE NEW R31 BATT INSULATION WHERE SPACE PERMITS.

9.5 PROVIDE NEW VAPOUR BARRIER TO WARM SIDE OF CEILING INSULATION.

9.6 PROVIDE NEW 1/2" STRAPPING @ 16" O.C. WHERE NOTED.

9.7 PROVIDE NEW CEILING FINISH AS PER OWNER.

9.8 PROVIDE NEW FASCIA TO MATCH WHERE ALUMINUM FLASHING AND GUTTER/LEAF MODIFICATIONS AS SHOWN.

9.9 NEW GUTTER/LEAF TO BE TIED INTO EXISTING GUTTER/LEAF WHERE NOTED.

9.10 MAINTAIN WEATHER PROTECTION AT ALL ROOF, WALL, FASCIA, AND SOFFIT INTERFACES.

10 GARAGE SEPARATION

10.1 GARAGE SEPARATION SHALL BE MAINTAINED.

10.2 SEAL ALL JOINTS, PENETRATIONS, BEAM POCKETS, AND WALL / FLOOR / CEILING INTERFACES BETWEEN GARAGE AND DWELLING OR VESTIBULE.

10.3 PROVIDE PASSAGE OF GARAGE FUMES INTO DWELLING OR VESTIBULE.

10.4 MAINTAIN EXISTING GARAGE WALL AIR BARRIER WHERE POSSIBLE.

10.5 REPAIR AND SEAL EXISTING GARAGE WALL AIR BARRIER WHERE DISTURBED BY NEW WORK.

10.6 SEAL BEAM POCKET AND FRONT OF GARAGE WALL CONDITIONS.

11 DOORS AND WINDOWS

11.1 DOOR AND WINDOW SIZES SHALL BE AS SHOWN ON DRAWINGS.

11.2 NEW EXTERIOR ENTRANCE DOOR SHALL BE INSULATED, PREHUNG, AND C/W FRAME, THRESHOLD, WEATHERSTRIPPING, LOCKSET, AND HARDWARE.

11.3 DOOR STYLE, GLAZING, COLOUR, AND FINISH AS PER OWNER.

11.4 NEW WINDOWS SHALL BE INSULATED VINYL WINDOWS C/W LOW-E ARGON DOUBLE GLAZED SEALED UNITS UNLESS NOTED OTHERWISE.

11.5 WINDOW STYLE, OPERATION, COLOUR, AND FINISH AS PER OWNER.

11.6 CONFIRM ROUGH OPENINGS WITH WINDOW AND DOOR SUPPLIERS PRIOR TO FRAMING.

11.7 FLASH, SEAL, WEATHER, AND INSTALL ALL DOORS AND WINDOWS AS PER MANUFACTURER SPECS.

11.8 PROVIDE LEVELS, JACK STUDS, KING STUDS, BLOCKING, AND BACKING AS SHOWN.

11.9 INFILL REMOVED OR REVISED WINDOW OPENINGS WITH STUD FRAMING AND WALL ASSEMBLY TO MATCH EXISTING WHERE POSSIBLE.

11.10 MAKE GOOD ALL INTERIOR AND EXTERIOR FINISHES AT DOOR AND WINDOW ALTERATION LOCATIONS.

11.11 FINAL LOCATION OF NEW VESTIBULE WINDOW (SY) TO BE CONFIRMED ON SITE WITH OWNER AND CONTRACTOR PRIOR TO FRAMING.

12 STAIRS, LANDING, AND GRADE

12.1 PROVIDE EXTERIOR RAMP @ APPROX 1:12 OR 2 RISER STONE AT FRONT STEP AS SHOWN.

12.2 NEW VESTIBULE FLOOR SHALL FUNCTION AS LANDING.

12.3 VERIFY FINAL GRADE AND FLOOR ELEVATIONS ON SITE.

12.4 RAMP HEIGHTS SHALL BE CONSISTENT WHERE POSSIBLE.

12.5 PROVIDE MIN 8' BETWEEN FINISHED GRADE AND DOOR SILL PLATE WHERE SHOWN.

12.6 FINAL GRADING SHALL PROMOTE POSITIVE DRAINAGE AWAY FROM THE DWELLING AND NEW VESTIBULE.

12.7 ADJUST FINAL GRADE TO TO STONE, SHIPTAIL, AND EXTERIOR FINISHES TO SUIT FIELD CONDITIONS WHILE MAINTAINING CODE-COMPLIANT STAIR GEOMETRY.

13 FIRE AND LIFE SAFETY

13.1 PROVIDE SMOKE ALARMS AND CARBON MONOXIDE ALARMS AS SHOWN ON DRAWINGS.

13.2 SMOKE ALARMS AND CARBON MONOXIDE ALARMS SHALL BE INSTALLED IN ACCORDANCE WITH CMC REQUIREMENTS.

13.3 EXISTING SMOKE ALARMS AND CARBON MONOXIDE ALARMS TO REMAIN WHERE SHOWN UNLESS RELOCATION OR REPLACEMENT IS REQUIRED BY FIELD CONDITIONS.

14 EXTERIOR FASTENERS, CONNECTORS, AND HARDWARE

14.1 ALL EXTERIOR FASTENERS, CONNECTORS, HANGERS, SADDLES, ANCHORS, AND HARDWARE SHALL BE SUITABLE FOR EXTERIOR USE.

14.2 ALL FASTENERS, CONNECTORS, HANGERS, SADDLES, ANCHORS, AND HARDWARE IN CONTACT WITH PT LUMBER SHALL BE COMPATIBLE WITH PT LUMBER.

14.3 ALL PENETRATION CONNECTORS AND HARDWARE SHALL BE INSTALLED AS PER MANUFACTURER SPECS.

14.4 DO NOT MIX ALL OR DISSIMILAR OR FASTENERS THROUGH MANUFACTURING POLICY UNLESS UNLESS PERMITTED BY THE MANUFACTURER.

14.5 ALL HARDWARE SHALL BE INSTALLED FOR ITS LISTED, INTENDED USE.

15 FLASHING AND WEATHER PROTECTION

15.1 NEW EXTERIOR FLASHINGS SHALL MATCH EXISTING WHERE POSSIBLE.

15.2 PROVIDE FLASHING AT ALL SILL TO DOOR, ROOF, DOOR, WINDOW, BEAM POCKET, SHIPTAIL AND TRIM INTERFACES.

15.3 PROVIDE SEALANT AT ALL EXTERIOR JOINTS, PENETRATIONS, AND TRANSITIONS AS REQUIRED.

15.4 PROVIDE CONTINUOUS WEATHER PROTECTION AT ALL NEW AND MODIFIED EXTERIOR ASSEMBLIES.

15.5 INTERIOR FINISHES SHALL BE AS PER OWNER.

15.6 MAKE GOOD ALL EXISTING FINISHES DISTURBED BY THE WORK.

15.7 FINAL MATERIALS, COLOURS, PROFILES, AND FINISH SELECTIONS AS PER OWNER.

16 MANUFACTURER REQUIREMENTS

16.1 REFER TO MANUFACTURER DOCUMENTATION FOR ALL WINDOWS, DOORS, CONNECTORS, HANGERS, SADDLES, ANCHORS, FASTENERS, INSULATION, AIR BARRIER, VAPOUR BARRIER, FLASHING, SEALANTS, SHIMS, AND TRIM PRODUCTS.

16.2 ALL PRODUCTS SHALL BE INSTALLED IN ACCORDANCE WITH THEIR LISTING, INTENDED USE, AND INSTALLATION INSTRUCTIONS.

16.3 MANUFACTURER INSTALLATION REQUIREMENTS SHALL GOVERN WHERE MORE STRINGENT THAN THESE DRAWINGS.

16.4 MANUFACTURER INSTALLATION REQUIREMENTS SHALL BE MADE AVAILABLE ON SITE FOR INSPECTION WHERE REQUESTED.

GENERAL NOTES

GENERAL NOTES

REFER TO SHEET A-1.0 FOR FULL PROJECT GENERAL NOTES AND SPECIFICATIONS.

CONTRACTOR SHALL REVIEW ALL DRAWINGS, DETAILS, NOTES, AND MANUFACTURER DOCUMENTATION PRIOR TO CONSTRUCTION.

DO NOT SCALE DRAWINGS.

USE FIGURED DIMENSIONS ONLY.

VERIFY ALL DIMENSIONS, GRADES, EXISTING CONDITIONS, AND SITE CONDITIONS PRIOR TO CONSTRUCTION.

REPORT DISCREPANCIES TO THE DESIGNER PRIOR TO PROCEEDING.

ALL WORK SHALL CONFORM TO THE CURRENT ADOPTED BUILDING CODE, APPLICABLE MUNICIPAL BY-LAWS, AND MANUFACTURER REQUIREMENTS.

EXISTING CONSTRUCTION SHOWN IS BASED ON AVAILABLE INFORMATION AND SHALL BE VERIFIED ON SITE.

ALL FASTENERS, CONNECTORS, HANGERS, SADDLES, ANCHORS, AND HARDWARE SHALL BE SUITABLE FOR EXTERIOR USE.

WOOD, MASONRY, CONNECTORS, FLASHING, SEALANTS, AND FINISHES SHALL BE INSTALLED AS PER MANUFACTURER SPECS.

GARAGE SEPARATION SHALL BE MAINTAINED.

PENETRATIONS, AIR BARRIER, VAPOUR BARRIER, FLASHING, AND WEATHER PROTECTION CONTINUITY.

DRAWING NOTES AND DETAILS TAKE PRECEDENCE WHERE MORE SPECIFIC.

[redacted]

MIDWEST SYSTEMS

[redacted]

DRAWN BY:	MKT	PROJECT: 26-005
CHECKED BY:	MKT	
SCALE:	AS SHOWN	DATE: 03.11.26
PLOT DATE:	AS SHOWN	SHEET NO: A1

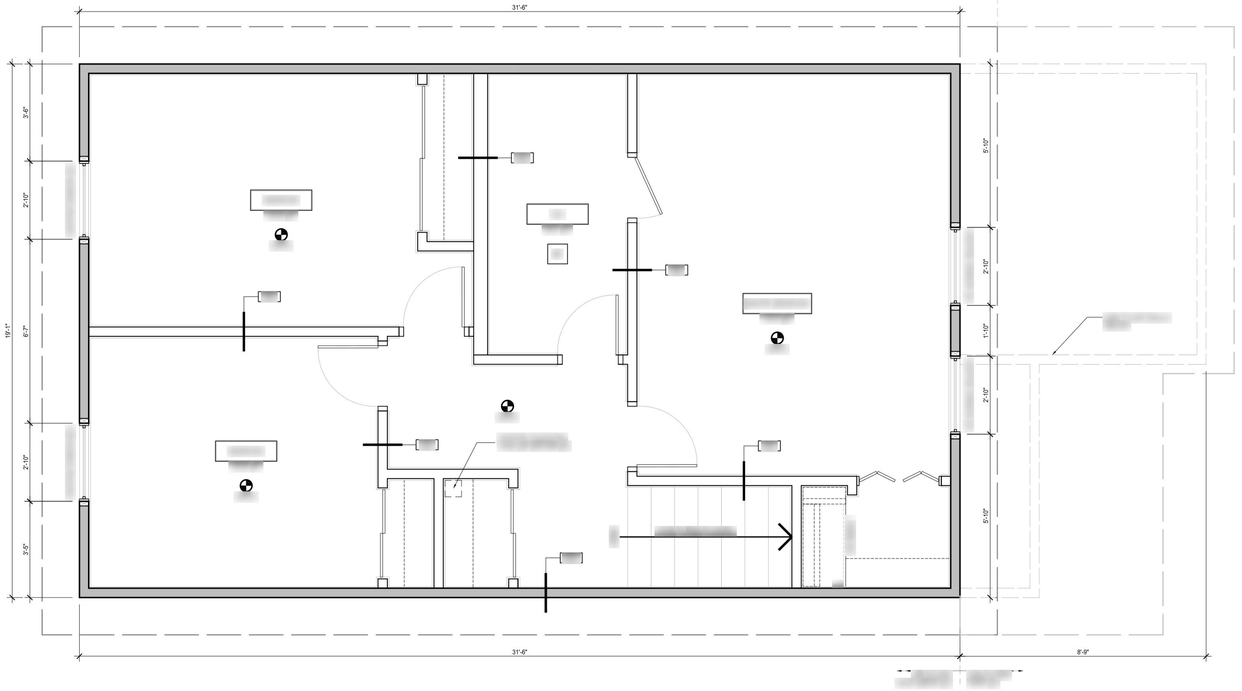

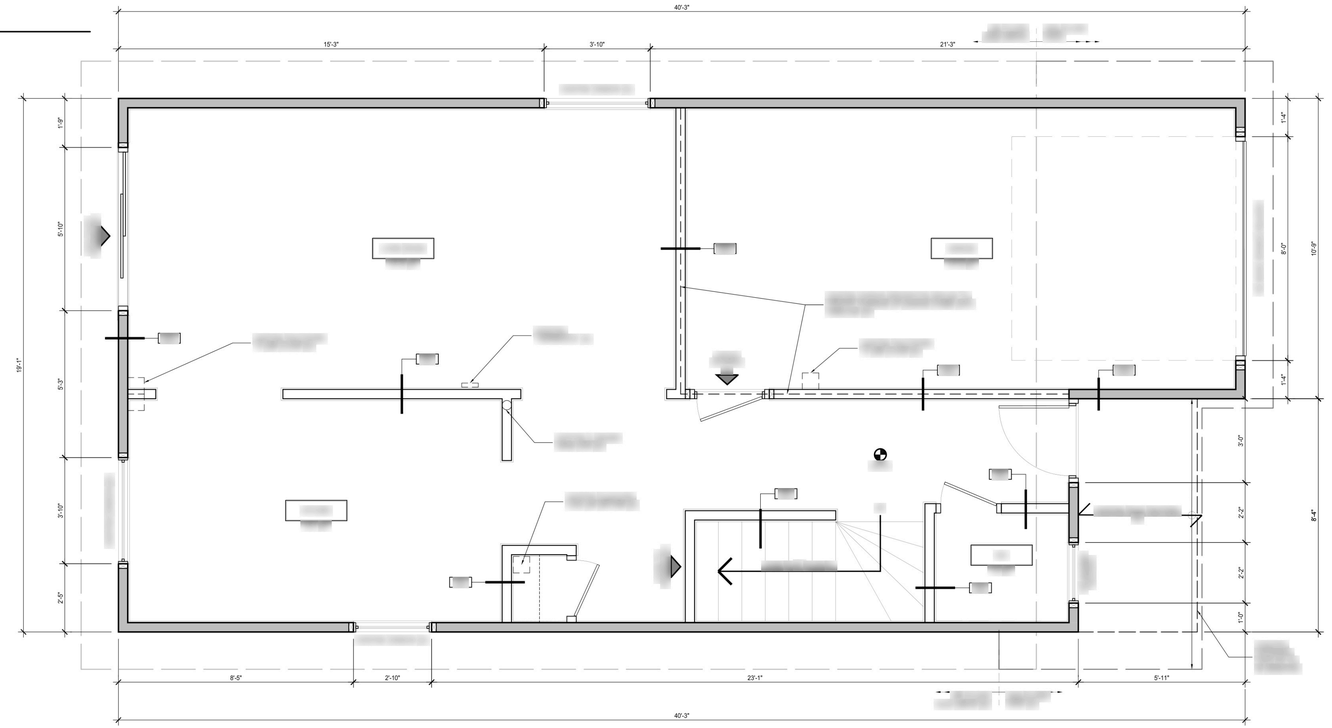

GENERAL NOTES

GENERAL NOTES

REFER TO SHEET G-1.0 FOR FULL PROJECT GENERAL NOTES AND SPECIFICATIONS

CONTRACTOR SHALL REVIEW ALL DRAWINGS, DETAILS, NOTES, AND MANUFACTURERS' DOCUMENTATION PRIOR TO CONSTRUCTION.

DO NOT SCALE DRAWINGS.

USE FIGURED DIMENSIONS ONLY.

VERIFY ALL DIMENSIONS, GRADES, EXISTING CONDITIONS, AND SITE CONDITIONS PRIOR TO CONSTRUCTION.

REPORT DISCREPANCIES TO THE DESIGNER PRIOR TO PROCEEDING.

ALL WORK SHALL CONFORM TO THE CURRENT ADOPTED BUILDING CODE, APPLICABLE RESIDENTIAL CODES, AND MANUFACTURER REQUIREMENTS.

EXISTING CONDITIONS SHOWN IS BASED ON AVAILABLE INFORMATION AND SHALL BE VERIFIED IN SITE.

ALL FASTENERS, CONNECTORS, FLASHING, SEALANTS, AND HARDWARE SHALL BE SUITABLE FOR EXTERIOR USE.

WORK REQUIRING CONNECTORS, FLASHING, SEALANTS, AND FINISHES SHALL BE INSTALLED AS PER MANUFACTURER'S SPECS.

SUBMIT INFORMATION SHALL BE REVIEW AND FINISH.

ADAPTOR OR BARRIER, CAREFUL MARKING, FLASHING, AND WEATHER PROTECTION CONTINUITY.

ENSURING NOTES AND DETAILS TAKE PRECEDENCE WHERE MORE SPECIFIC.

MIDWEST VISION

EXISTING FLOOR PLANS

25-005

A1.2

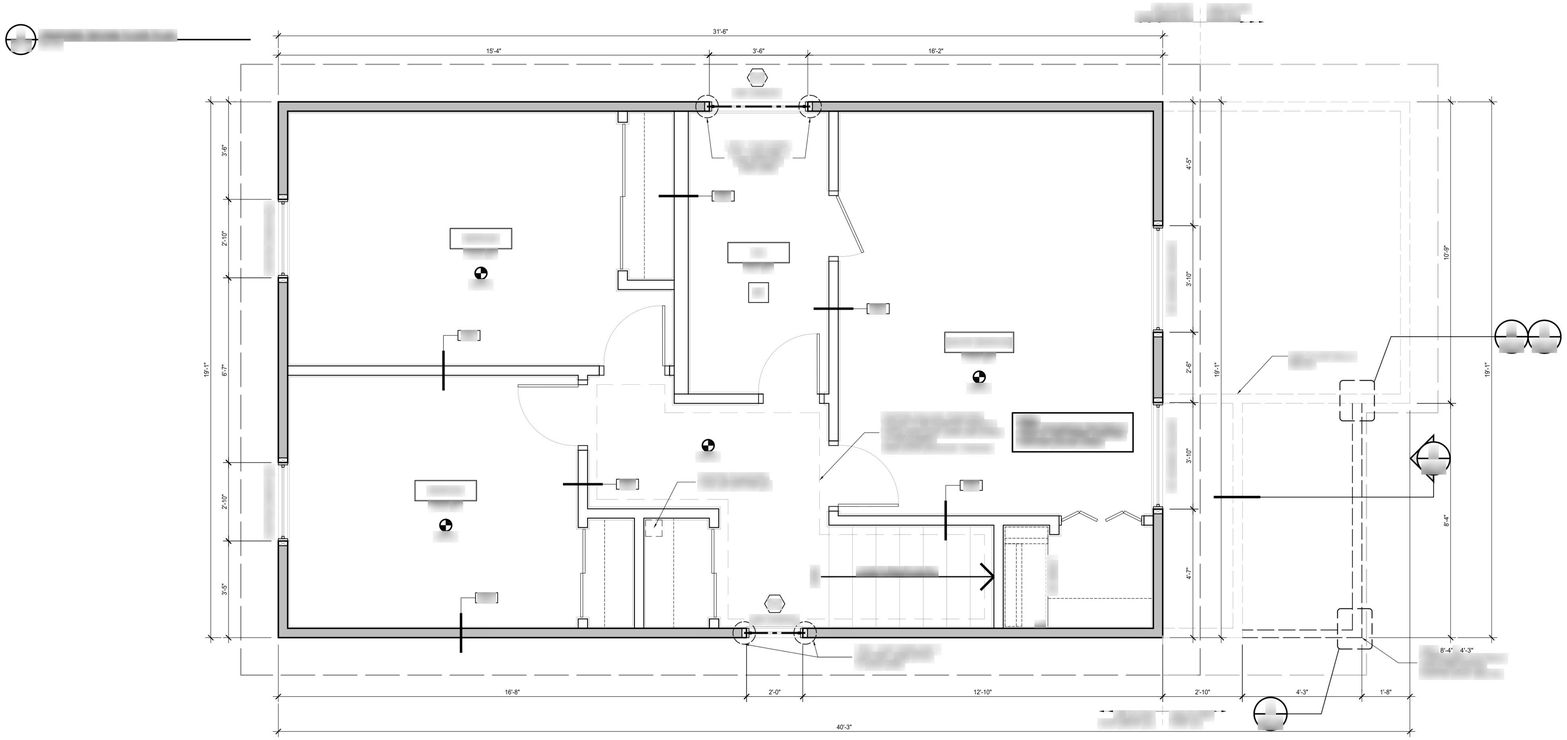

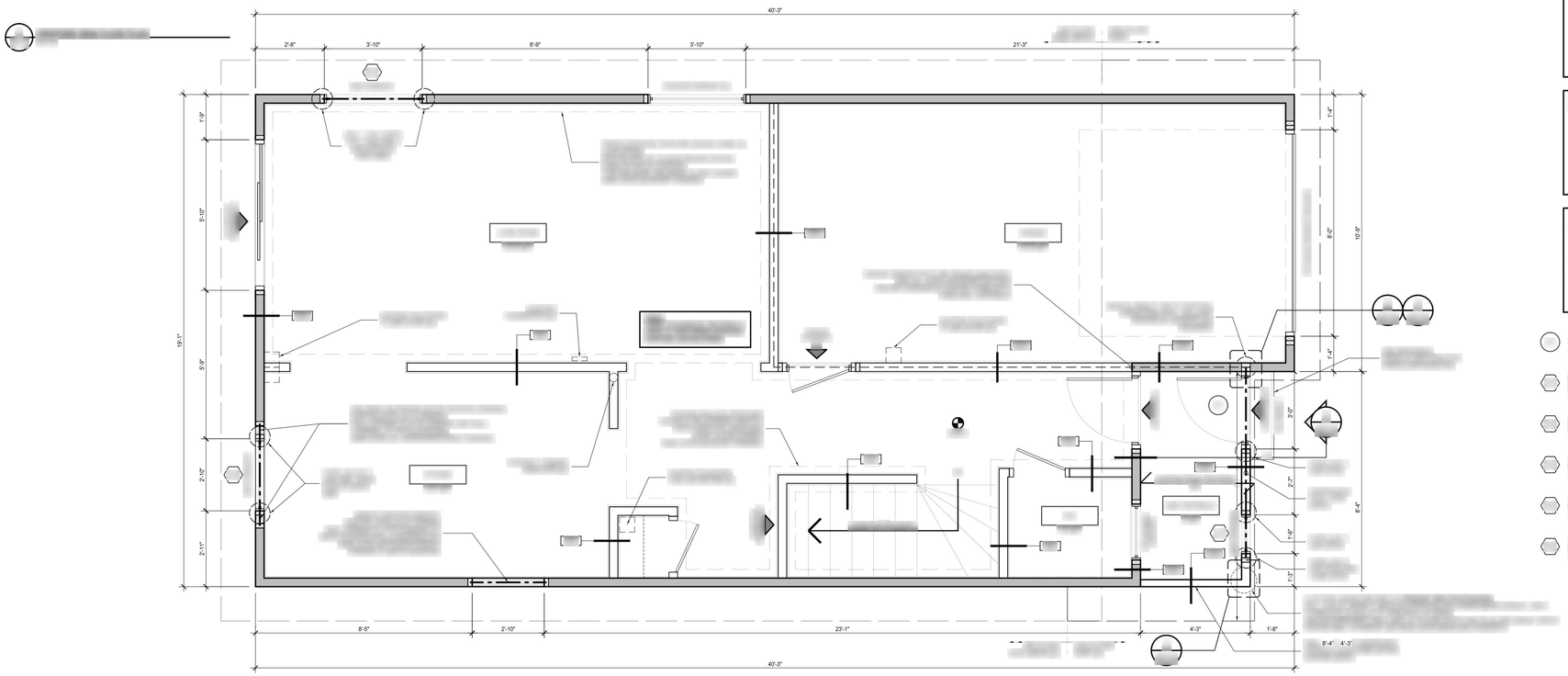

GENERAL NOTES

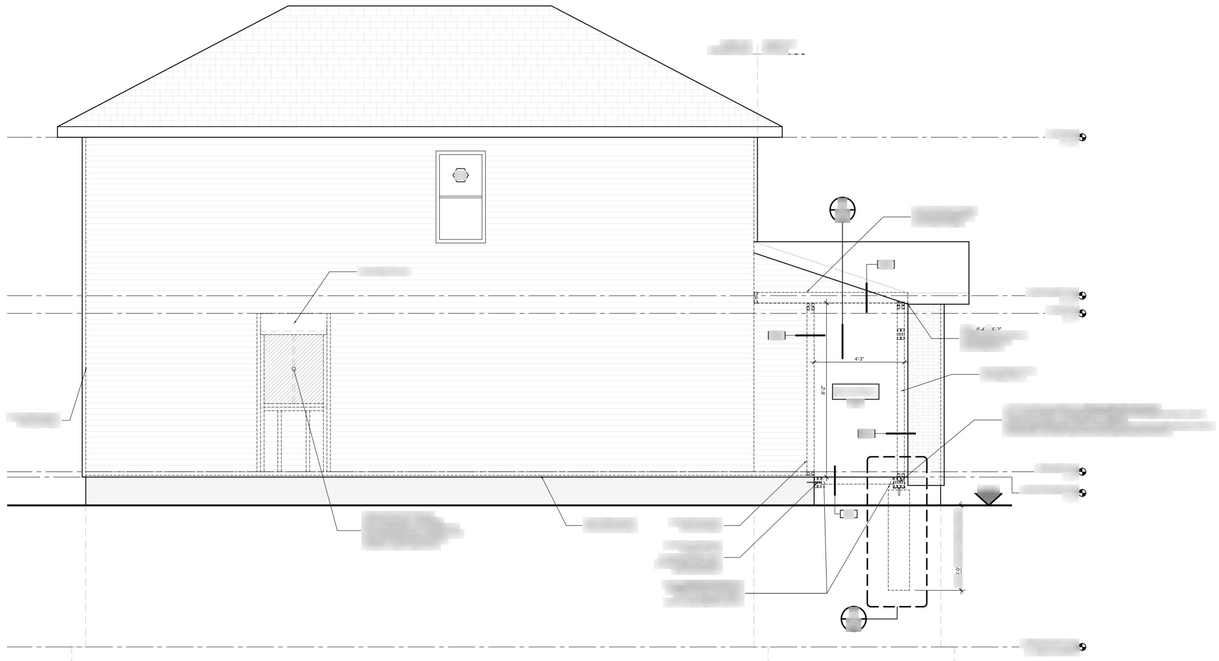

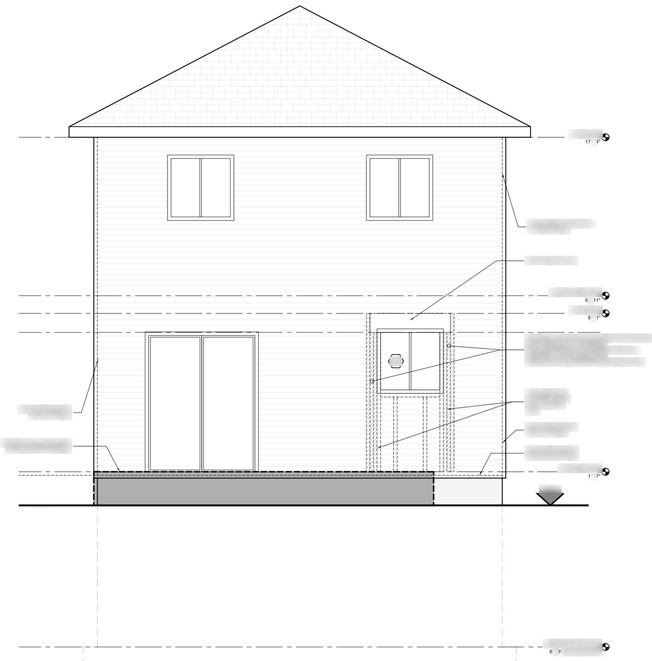

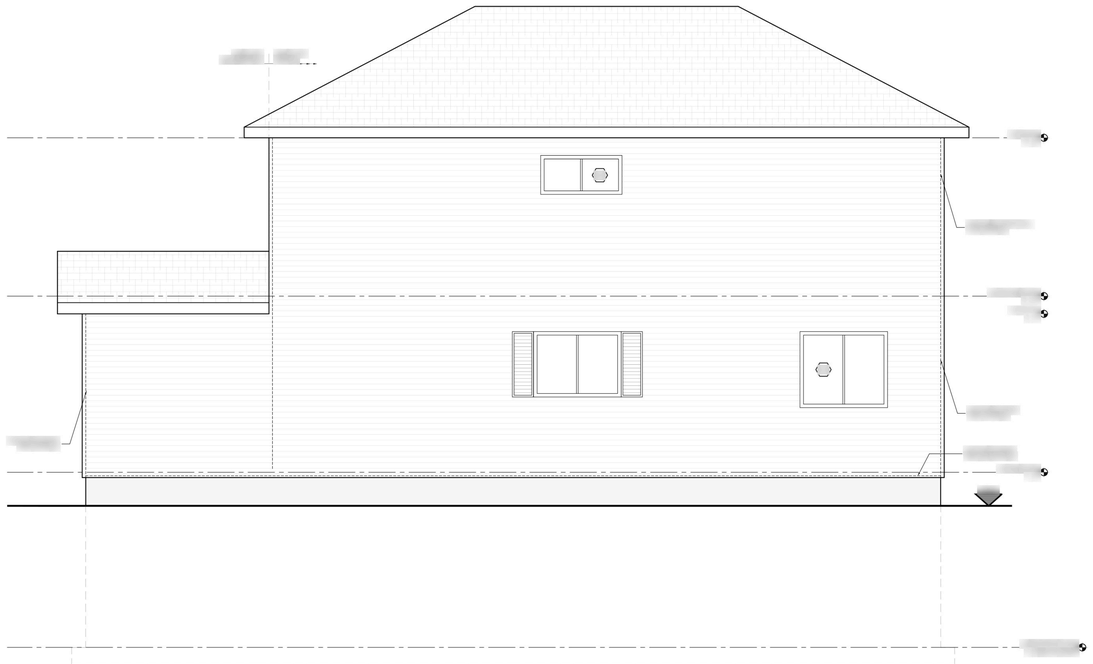

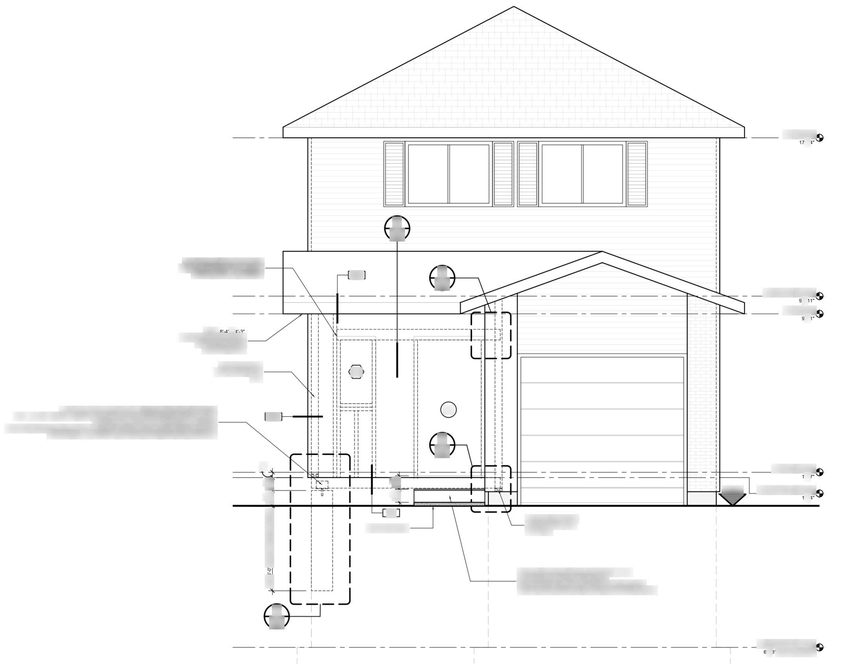

GENERAL NOTES

GENERAL NOTES

REFER TO SHEET A-1.0 FOR FULL PROJECT GENERAL NOTES AND SPECIFICATIONS

CONTRACTOR SHALL REVIEW ALL DRAWINGS, DETAILS, NOTES, AND MANUFACTURERS' DOCUMENTATION PRIOR TO CONSTRUCTION.

DO NOT SCALE DRAWINGS.

USE FIGURED DIMENSIONS ONLY.

VERIFY ALL DIMENSIONS, GRADES, EXISTING CONDITIONS, AND SITE CONDITIONS PRIOR TO CONSTRUCTION.

REPORT DISCREPANCIES TO THE DESIGNER PRIOR TO PROCEEDING.

ALL WORK SHALL CONFORM TO THE CURRENT ONTARIO BUILDING CODE, APPLICABLE BUILDING BY-LAWS, AND MANUFACTURER REQUIREMENTS.

EXISTING CONSTRUCTION SHOWN IS BASED ON AVAILABLE INFORMATION AND SHALL BE VERIFIED ON SITE.

ALL FASTENERS, CONNECTORS, FLASHING, SEALANTS, AND HARDWARE SHALL BE SUITABLE FOR EXTERIOR USE.

WHERE NEW/EXISTING CONNECTIONS, FLASHING, SEALANTS, AND FINISHES SHALL BE INSTALLED AS PER MANUFACTURER'S SPECS.

SMOKE DETECTORS SHALL BE WALL OR CEILING MOUNTED.

ADAPTOR OR BARRIER / GROUP NUMBER, FLASHING, AND WEATHER PROTECTION CONTINUITY.

DRAWING NOTES AND DETAILS TAKE PRECEDENCE WHERE MORE SPECIFIC.

[redacted]

[redacted]

[redacted]

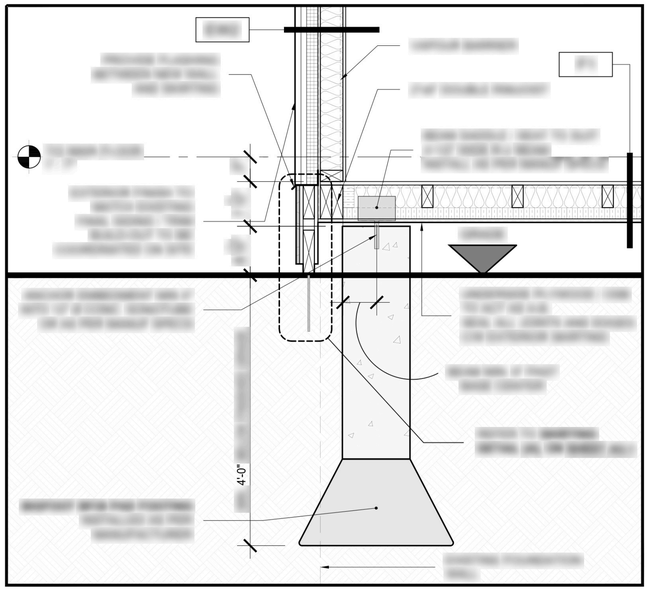

1 EXPOSED FLOOR SUPPORT AT SONOTUBE BASFOOT
1" = 1'-0"

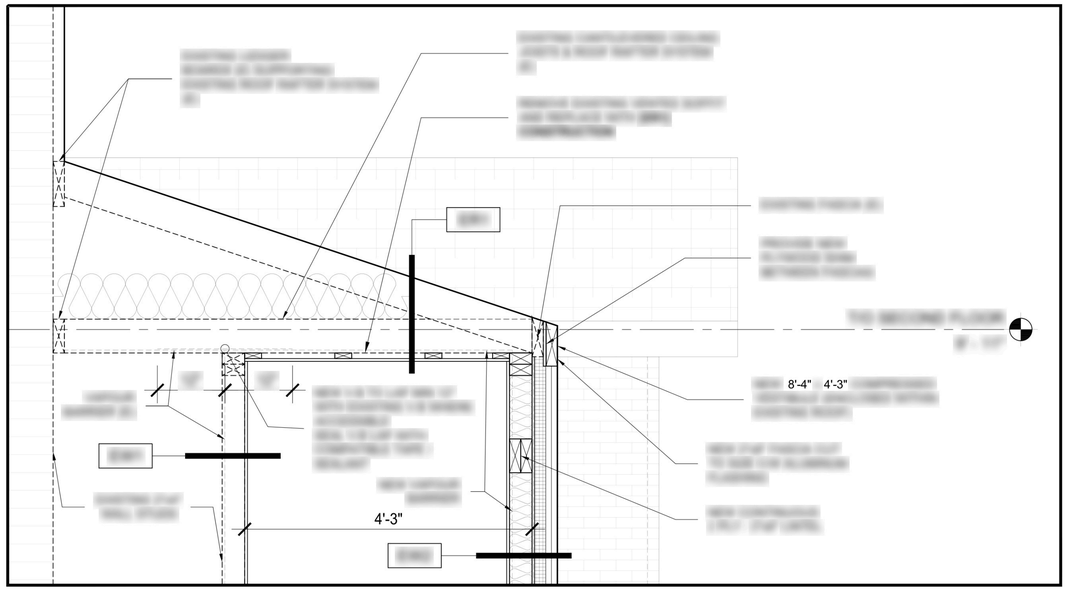

2 ROOF AND CEILING TIE-IN AT EXISTING OVERHANG
1" = 1'-0"

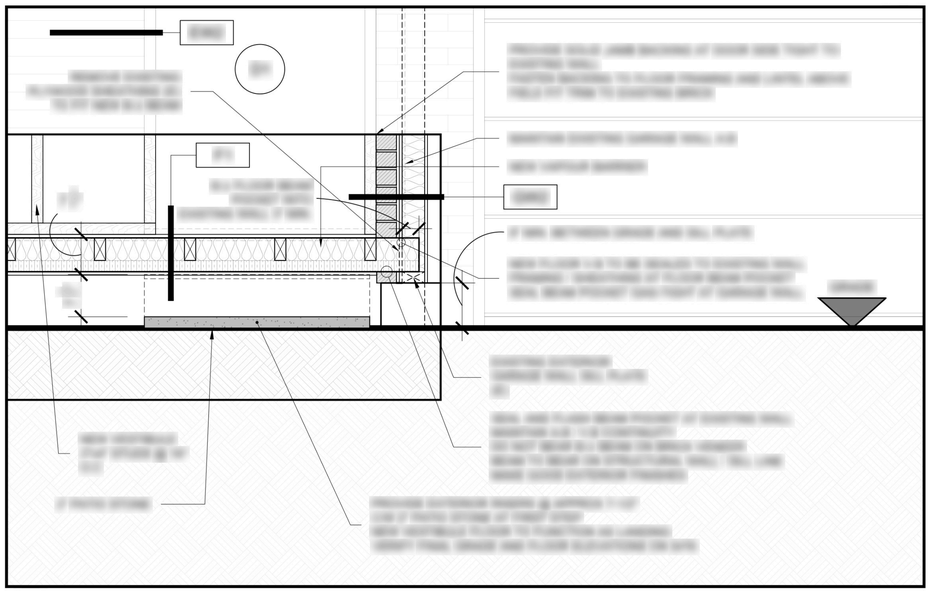

3 FLOOR BEAM POCKET AT EXISTING GARAGE WALL
1" = 1'-0"

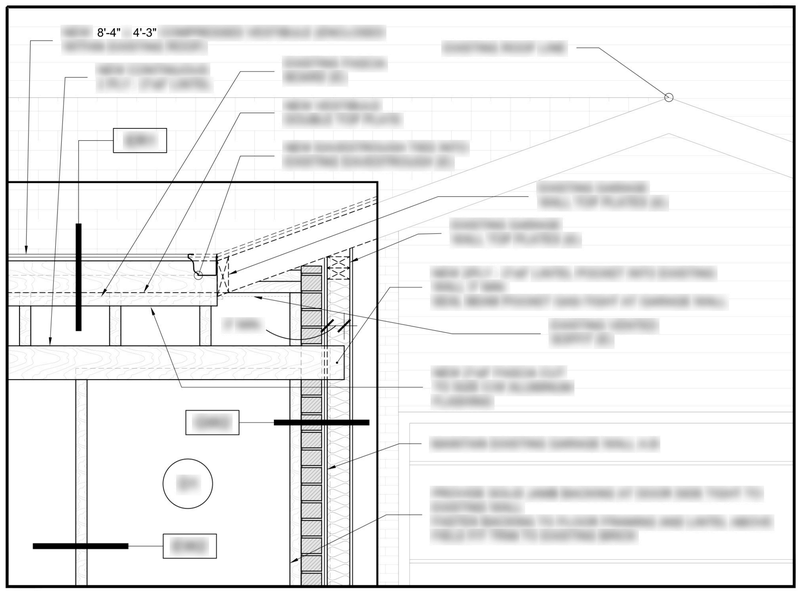

4 VESTIBULE WALL TO EXISTING ROOF TIE-IN
1" = 1'-0"

GENERAL NOTES

GENERAL NOTES

REFER TO SHEET A1.0 FOR FULL PROJECT GENERAL NOTES AND SPECIFICATIONS

CONTRACTOR SHALL REVIEW ALL DRAWINGS, DETAILS, NOTES, AND MANUFACTURERS' DOCUMENTATION PRIOR TO CONSTRUCTION.

DO NOT SCALE DRAWINGS.

USE FIGURED DIMENSIONS ONLY.

VERIFY ALL DIMENSIONS, GRADES, EXISTING CONDITIONS, AND SITE CONDITIONS PRIOR TO CONSTRUCTION.

REPORT DISCREPANCIES TO THE DESIGNER PRIOR TO PROCEEDING.

ALL WORK SHALL CONFORM TO THE CURRENT ADOPTED BUILDING CODE, APPLICABLE RESIDENTIAL CODES, AND MANUFACTURERS' REQUIREMENTS.

EXISTING CONSTRUCTION SHOWN IS BASED ON AVAILABLE INFORMATION AND SHALL BE VERIFIED ON SITE.

ALL FASTENERS, CONNECTORS, HANGERS, SHEARS, ANCHORS, AND HARDWARE SHALL BE SUITABLE FOR EXTERIOR USE.

WOOD, MASONRY, CONNECTORS, FLASHING, SEALANTS, AND FINISHES SHALL BE INSTALLED AS PER MANUFACTURER SPECS.

GARAGE SEPARATION SHALL BE MAINTAINED.

MAINTAIN 4-HR BARRIER. CAPITOL BARRIER, FLASHING, AND WEATHER PROTECTION CONTINUITY.

DRAWING NOTES AND DETAILS TAKE PRECEDENCE WHERE MORE SPECIFIC.

MIDWEST DESIGN

DRAWN BY:	MDT	PROJECT: 25-005
CHECKED BY:	MDT	
ISSUED:	100 SERVICING	SHEET NO.: A3.0
LAST ISSUED:	100 SERVICING	SHEET NO.: 3 OF 3

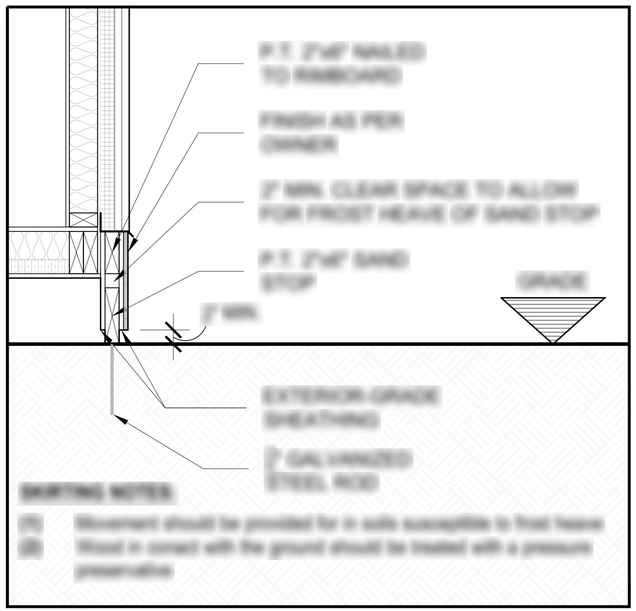

SKIRTING NOTES:

(1) Movement should be provided for in soils susceptible to frost heave

(2) Wood in contact with the ground should be treated with a pressure preservative

1 NEW VESTIBULE SKIRTING DETAIL
N.T.S.

GENERAL NOTES

GENERAL NOTES

[illegible]

SKIRTING DETAIL

DRAWN BY	[illegible]	26-005
CHECKED BY	[illegible]	
DATE	[illegible]	A2.1
	[illegible]	